Deal Town Council, Town Hall, High Street, Deal, Kent, CT14 6TR.
01304 361999 - deal.town.council@deal.gov.uk - www.deal.gov.uk

`**To all Committee Members**: You are hereby summoned to attend a meeting of the Transport & Infrastructure Committee at the Town Hall on **Wednesday 18th March 2026** at 7.15pm to transact the business shown on the agenda below.

Members of the public and press are welcome to attend.

Any member of the public may submit a written statement of no more than 500 words relating to any item on this agenda. These must be received by 10am on Tuesday 17th March 2026 by email to deal.town.council@deal.gov.uk or post to the above address. These statements will be circulated to all present at the meeting and become part of the public record of the meeting, names will be redacted.

Laura Marney – Committee Clerk
Date: 12th March 2026

AGENDA

1	**Chairperson's opening remarks:**	Chairperson
2	**Apologies for absence:**	Committee Clerk
3	**Declarations of interest:** To receive any declarations of interest from Members in respect of business to be transacted on the agenda.	Attach 1
4	**Public Participation and Statements received:** For councillor information: Members of the public may make representations, answer questions and give evidence at the meeting in respect of the business on the agenda. This shall not exceed 15 minutes.	
5	**The minutes of the Transport & Infrastructure Committee meeting held on Tuesday 13th January for approval and signing:** Decision required.	Attach 2
6	**DDC Feedback – Sandown Campervan Parking:** Decision required.	Attach 3
7	**DDC Proposed access boardwalk – Deal/Walmer:** Decision required.	Attach 4
8	**DTC 4th HIP Application:** Decision required.	Attach 5
9	**Correspondence received: Highway/Property concerns - Dovetail Cottage, Middle St. Deal:** Decision required.	Attach 6
10	**Committee Clerk Report:** Information to note.	Attach 7
	Date of next meeting: 14th May 2026	
Filming and audio recording of Town Council meetings, by representatives of the media and also by members of the public using small media tools, is permitted. Please refer to the council's protocol for recording of meetings for guidance, available to download on www.deal.gov.uk or on request.		
Committee members: Cllr B Bano, Cllr Craggs, Cllr M Eddy, Cllr T Bond. Cllr D Cronk, Cllr M Cronk,Cllr D Parks, Cllr P Jull, Ms C Dubber, Ms L Sills and Mr T Taylor.		

ATTACHMENT 1

Declaration of Interest

Disclosable Pecuniary Interest (DPI)

Where a Member has a new or registered DPI in a matter under consideration they must disclose that they have an interest and, unless the Monitoring Officer has agreed in advance that the DPI is a 'Sensitive Interest', explain the nature of that interest at the meeting. The Member must withdraw from the meeting at the commencement of the consideration of any matter in which they have declared a DPI and must not participate in any discussion of, or vote taken on, the matter unless they have been granted a dispensation permitting them to do so. If during the consideration of any item a Member becomes aware that they have a DPI in the matter they should declare the interest immediately and, subject to any dispensations, withdraw from the meeting.

Other Significant Interest (OSI)

Where a Member is declaring an OSI they must also disclose the interest and explain the nature of the interest at the meeting. The Member must withdraw from the meeting at the commencement of the consideration of any matter in which they have declared a OSI and must not participate in any discussion of, or vote taken on, the matter unless they have been granted a dispensation to do so or the meeting is one at which members of the public are permitted to speak for the purpose of making representations, answering questions or giving evidence relating to the matter. In the latter case, the Member may only participate on the same basis as a member of the public and cannot participate in any discussion of, or vote taken on, the matter and must withdraw from the meeting in accordance with the Council's procedure rules.

Voluntary Announcement of Other Interests (VAOI)

Where a Member does not have either a DPI or OSI but is of the opinion that for transparency reasons alone s/he should make an announcement in respect of a matter under consideration, they can make a VAOI. A Member declaring a VAOI may still remain at the meeting and vote on the matter under consideration.

Note to the Code:

Situations in which a Member may wish to make a VAOI include membership of outside bodies that have made representations on agenda items; where a Member knows a person involved, but does not have a close association with that person; or where an item would affect the well-being of a Member, relative, close associate, employer, etc. but not his/her financial position. It should be emphasised that an effect on the financial position of a Member, relative, close associate, employer, etc OR an application made by a Member, relative, close associate, employer, etc would both probably constitute either an OSI or in some cases a DPI.

ATTACHMENT 2

Deal Town Council, Town Hall, High Street, Deal, Kent CT14 6TR

Tel: 01304 361999. Email: deal.town.council@deal.gov.uk

The Minutes of the Transport & Infrastructure Committee meeting held on Tuesday 13 January 2026 at Deal Town Hall.

Present: Cllr B Bano (Vice-Chairperson)
Cllr M Eddy
Cllr P Jull
Cllr T Bond
Ms C Dubber (Co-opted member)

Officers: Mrs L Marney (Committee Clerk)
Ms J Harper (Asst to the Town Clerk)

Other: None present

1	**Chairman's opening remarks:** The Chairperson welcomed everyone to the meeting and read the fire evacuation procedures.	Chairperson
2	**Apologies for absence**: Cllr D Parks due to work commitments. Cllr D Cronk and Cllr M Cronk were absent. Co-opted Members Louise Sills and Toby Taylor were absent.	Committee Clerk
3	**Declarations of interest:** None received.	
4	**Public Participation and Statements received**: None received.	
5	**The minutes of the Transport & Infrastructure Committee meeting held on Wednesday 19th November 2026 for approval and signing: Members RESOLVED**: To accept the minutes of the Transport & Infrastructure Committee meeting held on Wednesday 19th November 2026. The Chairperson duly signed the minutes. (P) Cllr M Eddy (S) Cllr T Bond. All agreed.	Chairperson
6	**DTC 4th HIP Applications**: Members RESOLVED: To take forward the current priority list and consider further options before the 4th HIP is submitted in May 2026. (P) Cllr P Jull (S) Cllr M Eddy. All agreed.	Committee Clerk
7	**KCC Feedback – DTC HIP:** Members RESOLVED: To note the report. (P) Cllr M Eddy (S) Cllr T Bond. All agreed.	Committee Clerk
8	**DDD – Amendment No.2 to On-Street Traffic Order:** Members RESOLVED: To accept the DDC Disabled parking amendments for Deal and Walmer. (P) Cllr M Eddy (S) Cllr T Bond. All agreed.	Committee Clerk
9	**Correspondence received:** 1. **Sandown Castle Campervan Parking:** Members RESOLVED: The Committee Clerk liaise with Walmer Town Council, DDC and Kent County Council to explore ways to resolve this issue. (P) Cllr M Eddy (S) Cllr T Bond. All agreed. 2. **Albert Road - HGV's and Traffic Volumes:** Members RESOLVED: Committee Clerk to reply to the resident to acknowledge their communication to say the Council appreciates her concerns but unfortunately, it is out of our jurisdiction. (P) Cllr T Bond (S) Cllr M Eddy. All agreed. 3. **Accessible Toilets in Deal – Emergency Cords/Buttons:** Members RESOLVED: The Deputy Town Clerk in liaison with the Committee Clerk writes to DDC Property Services to request that appropriate signage is placed inside and outside the toilets and advise DDC that it is unacceptable that there are no plans to improve the alarm system in the disabled toilets of which DTC provides a substantial contribution towards cleaning and maintenance. (P) Cllr T Bond (S) Cllr M Eddy. All agreed.	Committee Clerk Committee Clerk Deputy Town Clerk/ Committee Clerk
	The Chairperson closed the meeting at 7.50pm.	

ATTACHMENT 3

DEAL TOWN COUNCIL
MEMORANDUM

To: Cllr B Bano, Chairperson of the Transport & Infrastructure Committee; Members of the Transport & Infrastructure Committee
From: Mrs L Marney – Committee Clerk
Date: 5th March 2026
Subject: DDC Feedback – Campervans parking at Sandown Castle

As Committee members will be aware, this item was discussed at the Transport & Infrastructure Committee meeting held on 13th January following correspondence received from residents with serious concerns regarding the number of Campervans parking in the Sandown Castle area of Deal (see photo attached).

Members RESOLVED: *The Committee Clerk liaise with Walmer Town Council, DDC and Kent County Council to explore ways to resolve this issue*.

The Committee Clerk liaised with DDC, KCC and WTC and it was confirmed that this area of concern came under the remit of Dover District Council. The Committee Clerk and the DDC Parking Services Manager met on the 4th February at the site where this matter was discussed.

Following the meeting the below correspondence was received from the DDC Parking Services Manager:

"*As discussed, please see the following summary of items to move forward.*

- *"It would be possible to propose a restriction on motor homes between the hours of 6pm - 6 am in this location. To do this we would add the change to our Traffic Regulation Order (TRO) amendments with the next one due in June/July. This would then go to a period of consultation and follow due process the outcome of which is to be decided.*
- *Consideration should be given to the length/area of restriction as it is often the case that when a control like this is proposed the issue is simply moved up the road. It also has a domino effect with residents requesting similar changes in their location across the district.*
- *There is a cost to implement a change if accepted after the TRO consultation period which includes signs and lines etc in addition to the TRO application costs. For this reason, we would request a strategy be considered with bulk changes incorporated to manage the risks highlighted above rather than dealing with a series of small amendments.*

In terms of next steps if you would propose the area to be covered in this initial tranche, I will then arrange to add this to the TRO amendment in advance of June/July.

I would also be happy to then attend the next meeting in March to help facilitate a strategic discussion on approach for motorhome parking in Deal, including seeking views on the approach and impacts of taking any actions.

It would also be helpful to understand any options for a dedicated location within Deal such as Borrow Pit and the feasibility of implementing this along with any impacts to residents."

Decision required: Members to consider how to proceed.

ATTACHMENT 4

DEAL TOWN COUNCIL
MEMORANDUM

To: Cllr B Bano, Chairperson of the Transport & Infrastructure Committee; Members of the Transport & Infrastructure Committee
From: Mrs L Marney - Committee Clerk
Date: 9th March 2026
Subject: DDC Proposed access boardwalk – Deal & Walmer

Deal Town Council have received a proposal from DDC Design Team regarding a proposed access boardwalk in the Walmer area that borders Deal. The DDC correspondence is as follows:

"You may have already heard but the council is looking to improve wheelchair access onto the beach following requests from local members of the public. Consequently, I attach the above proposal that looks to install the boardwalk opposite Marine Road just past the paddling pool and Hut 55. The reason for this location is mainly for the access and parking on Marine Road, which can incorporate further blue badge parking if deemed successful. The beach also remains at its widest point being unaffected by winter storms which allows good opportunity for improved access to the beach and an area where wheelchair users can rest and enjoy the extended coastal viewpoints.

The Councils coastal budget is looking to provide as much access as feasible and so with the attached engineering solution the design can reach 45m off the promenade. However, the Council is keen to enhance the area further with some indigenous low maintenance coastal planting beds, timber wind breaks and benching possibly (plan attached). I appreciate this sits close to your boundary lines, but I think members would agree to see the full potential of this project and so I would appreciate it if you would share this with your members and see if each Council would be willing to make a small contribution? I have estimated the enhancements to be approximately 10k total and so if each Council could consider a 5k contribution it could make all the difference.

If you could let me have your thoughts and what members think. In the meantime, please don't hesitate to get in touch if you have any further questions."

See attached location plan, proposed plan and proposed timber boardwalk details.

For Committee Member information:
Officers explored what has been achieved at other sites and in June 2025, Bexhill on Sea opened their accessible boardwalk and beach garden for residents and people with mobility issues to enjoy. The following link shows the boardwalk/garden in more detail.
Bexhill Beach Garden has official opening this weekend

Recommendations:

1. T&I Committee to review the proposed plan and funding request from DDC.
2. T&I Committee to make recommendation to Full Council as to if the plan from DDC should be supported, and if a contribution of £5,000 is recommended to be paid from the project fund.

Decision required: To consider the above recommendations.

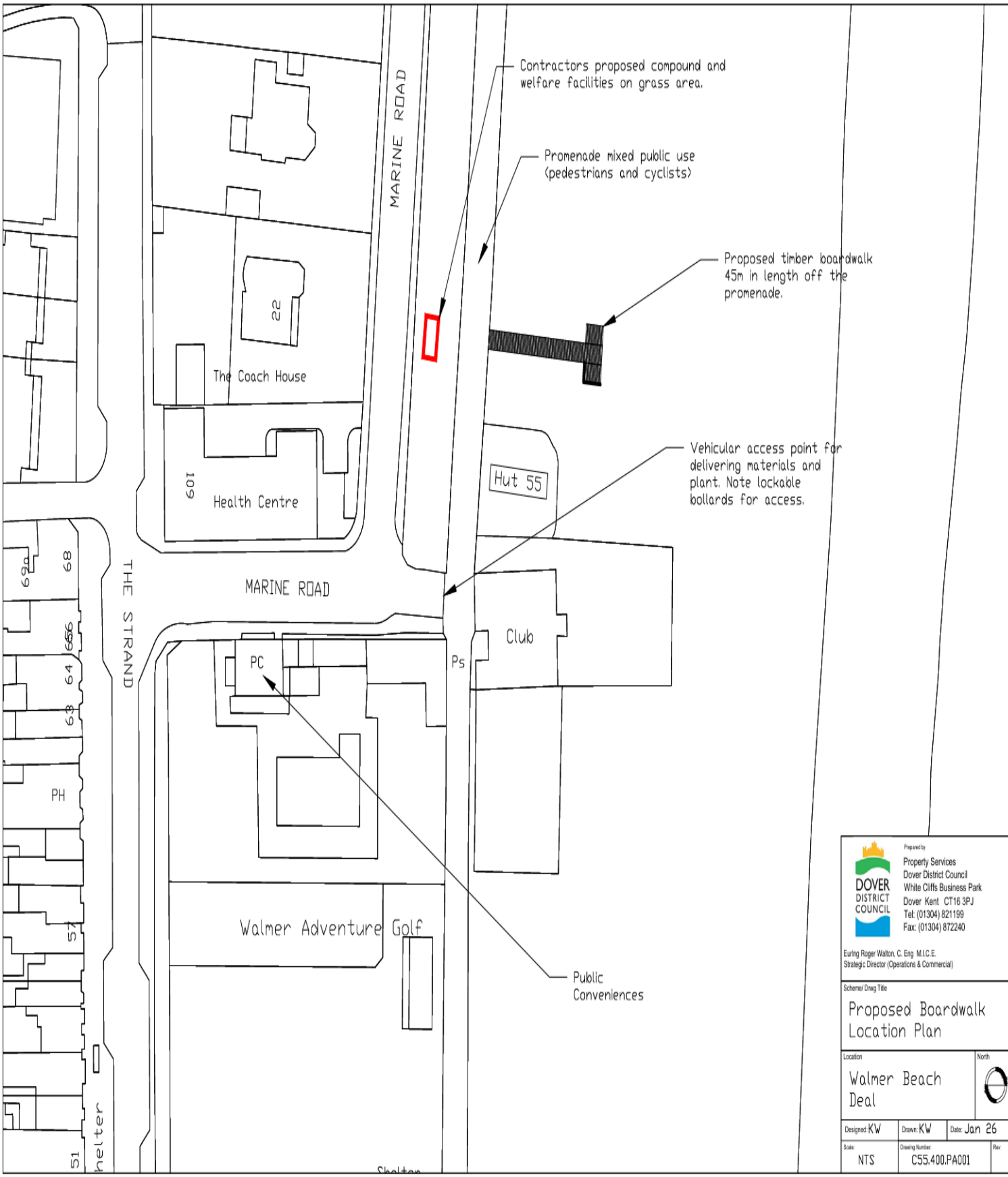
Contractors proposed compound and welfare facilities on grass area.
Promenade mixed public use (pedestrians and cyclists)
Proposed timber boardwalk 45m in length off the promenade.
Vehicular access point for delivering materials and plant. Note lockable bollards for access.
Public Conveniences
MARINE ROAD
MARINE ROAD
THE STRAND
22
The Coach House
109
Health Centre
Hut 55
Club
PC
Ps
Walmer Adventure Golf
PH
68
69a
66
65
64
63
57
51
Shelter
Prepared by
Property Services
Dover District Council
White Cliffs Business Park
Dover Kent CT16 3PJ
Tel: (01304) 821199
Fax: (01304) 872240
DOVER DISTRICT COUNCIL
Eurling Roger Walton, C. Eng M.I.C.E.
Strategic Director (Operations & Commercial)
Scheme/ Drwg Title
Proposed Boardwalk Location Plan
Location
Walmer Beach Deal
North
Designed: KW
Drawn: KW
Date: Jan 26
Scale: NTS
Drawing Number: C55.400.PA001
Rev:

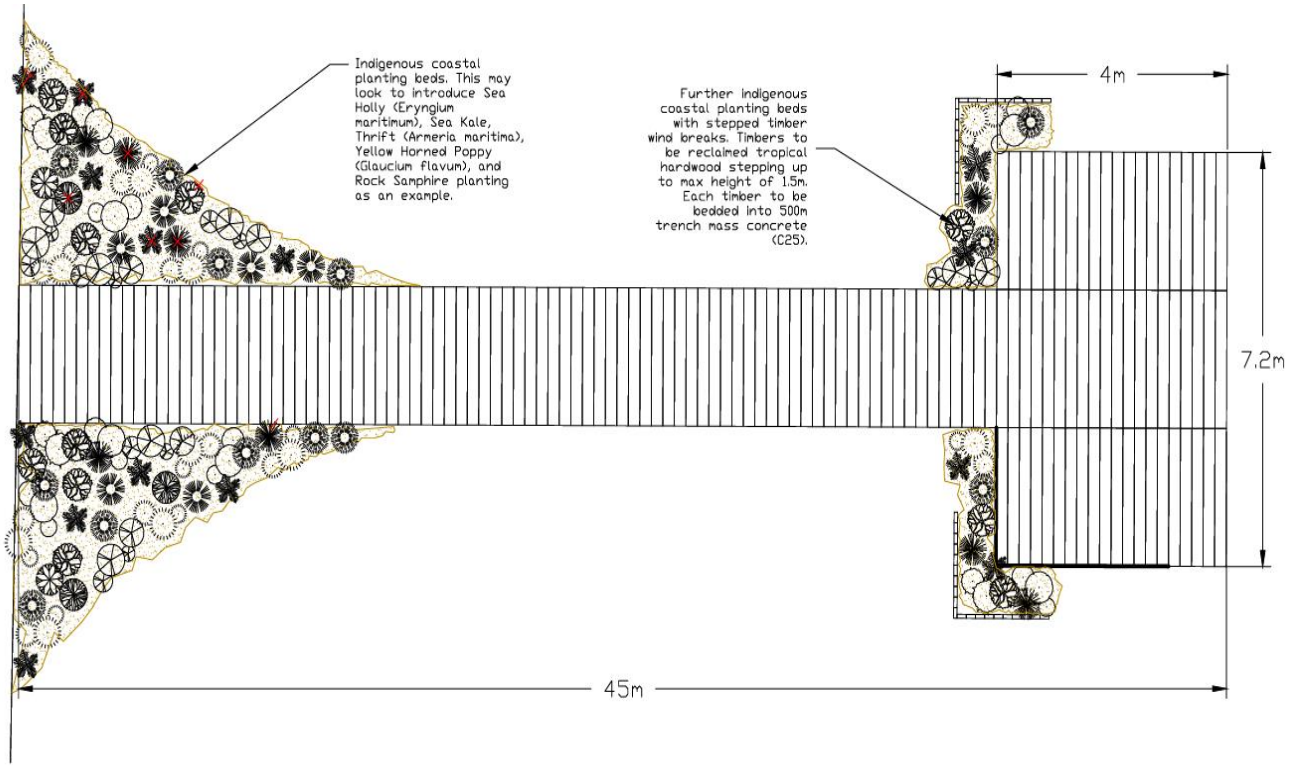

Sea Kale

Sea Holly

Yellow Horned Poppy

Prepared by
Property Services
Dover District Council
White Cliffs Business Park
Dover Kent CT16 3PJ
Tel: (01304) 821199
Fax: (01304) 872240

Euring Roger Walton, C. Eng M.I.C.E.
Strategic Director (Operations & Commercial)

Scheme/ Drwg Title
Proposed Boardwalk Plan

Location
Walmer Beach Deal

Designed: KW | Drawn: KW | Date: Jan

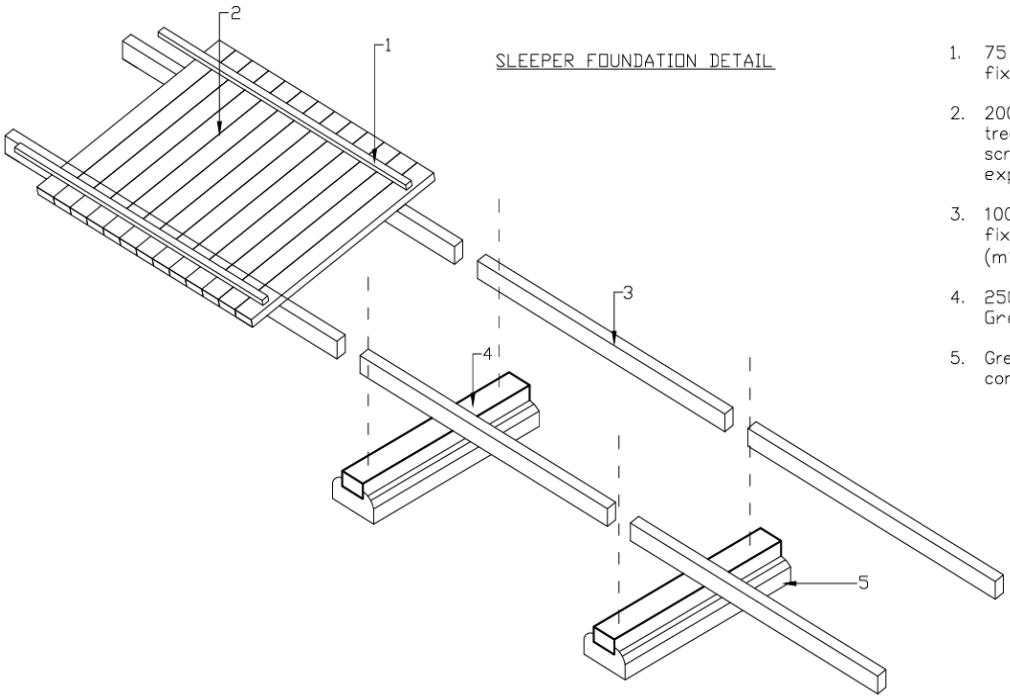

1. 75 x 50mm HC4 treated timber edging strips fixed to decking with stainless steel screws.
2. 200 x 75 x 2400mm HC4 Treated timber decking treads fixed to sleeper joists with stainless steel screws. Allow 5-8mm between each board for expansion.
3. 100 x 175mm treated Greenheart timber joists fixed internally with stainless steel coach screws (m12) & Galvanised truss clips.
4. 250 x 150 x 2000mm treated reclaimed Greenheart sleepers.
5. Greenheart sleepers to be haunched in C25 concrete 600mm mass trench fill.

ATTACHMENT 5

DEAL TOWN COUNCIL
MEMORANDUM

To: Cllr B Bano, Chairperson of the Transport & Infrastructure Committee; Members of the Transport & Infrastructure Committee

From: Mrs L Marney - Committee Clerk & Mr P Bone - Deputy Town Clerk

Date: 6th March 2026

Subject: Highways Improvement Plan – 4th Draft Application

.
At the T&I Committee meeting held on 13th January 2026, the Committee Clerk collated a priority list for Deal Town Council's 4th HIP application, following discussion by the Committee, Members RESOLVED: To take forward the current priority list and consider further options before the 4th HIP is submitted in May.

Kent County Council confirmed in December 2025 that they will be fully funding drop kerbs at the following locations: St Richards Road (near St Mary's School and Doctors surgery), Mill Road (Manor Road end), Mill Road (outside the Co-op Supermarket) and Prince of Wales Terrace (Seafront by Sondes Road).

At the January 2026 Full Council meeting, members agreed to contribute £6,000 to the funding of further drop kerbs at Darracott Close (London Road), Cowper Road (London Road) and Golf Road (North end).

The work on the installation of all the above drop kerbs is due to start in April/May 2026, the KCC East Highways Improvement Officer has advised that she will keep the Committee Clerk updated on these projects and the Committee Clerk will feedback to Committee on their progress.

Please see current priority list attached.

Recommendations:

1. Members to agree for the 3 drops kerbs part funded by DTC and the 4 drop kerbs being fully funded by KCC to be removed from the 4th HIP priority list.
2. Members to provide further suggestions for the priority list for the DTC 4th HIP application.

Decision required: Members to consider the above recommendations.

DTC 4th HIP Priorities List

Priority	**Location**	**Problem/Concern**	**What do you feel are the potential solutions?**	**KCC Comments (This column is to be completed by Project Manager ONLY)**
1	Sainsburys junction West Street	Congestion builds up at this location by cars turning right out of Sainsburys heading for the traffic lights.	A keep clear box in the road on West Street at the entrance to Sainsburys.	
2	Queen Street (traffic lights to turn right into West Street)	For Traffic coming up Queen St. to turn right into West Street there is a turning lane long enough to fit 3 cars. Too often the lead car only goes halfway along the box leaving no room for the 2nd car to get over leaving it's back end blocking the lane for traffic wanting to go straight on over the lights.	A curving line is used on many roundabouts to guide traffic starting from where a car would be standing at the head on the lane waiting for oncoming traffic, would encourage all 3 spaces to be used before straight on traffic is blocked, allowing more traffic to clear the queue on each green phase. A reduction in idling traffic spewing fumes in a road busy with pedestrians must be beneficial.	
3	College Road /Ark Lane	No safe crossing therefore this is a hazard to wheelchair and mobility scooter users.	Install pedestrian dropped kerbs both sides of Ark Lane at the College Road end.	4/5/23 LC - KCC to then investigate with Planning & Advice.
4	Western Road/Albert Rd train gate crossing (left side down from the fire station)	No safe crossing for wheelchair and buggy users which is hindering access to this area.	Drop Kerb needed.	09/06/25 – LC to establish land ownership and whether a dropped kerb crossing is feasible.
5	Darracott Close	No safe crossing for pedestrians and wheelchairs users to cross the road	Drop Kerb needed	27/01/26- DTC FC agreed to pay contribution to KCC to fund this drop kerb

6	Golf Road (No.71-81)	No safe crossing for pedestrians and wheelchairs users to cross the road	Drop Kerb needed	27/01/26- DTC FC agreed to pay contribution to KCC to fund this drop kerb
7	Cowper Rd off London Rd	No safe crossing for pedestrians and wheelchairs users to cross the road	Drop Kerb needed	27/01/26- DTC FC agreed to pay contribution to KCC to fund this drop kerb
8	Prince of Wales Terrace/Sondes Road – South Street	No safe crossing to access beach on seafront, vast number of people just cross anywhere, potentially dangerous to pedestrians and motorists.	Drop Kerb needed or Pedestrian crossing	08/12/25 - KCC to fully fund the drop kerb at this location
9	Hamilton Road/Mill Road Junction by Co-op Supermarket	No Crossing point on any part of this busy junction. Install a crossing at safest location for school children and people with mobility issues.	Install Crossing point as busy junction used by many residents as shop and school nearby.	08/12/25 - KCC to fully fund the drop kerb at this location
10	St Richard's Road	No crossing point for pedestrians. Install a pedestrian crossing – located between 227 St Richards Rd by Doctors Surgery & St Marys RC Primary School on St Richards Rd.	Install Crossing point on this busy road which is used by many residents as doctors surgery and school nearby.	08/12/25 -KCC to fully fund the drop kerb at this location
11	Mill Hill/Manor Road Junction	Mill Hill/Manor Road Junction	Install Crossing point on this busy road which is used by many residents.	08/12/25 - KCC to fully fund the drop kerb at this location

ATTACHMENT 6

DEAL TOWN COUNCIL
MEMORANDUM

To: Cllr B Bano, Chairperson of the Transport & Infrastructure Committee; Members of the Transport & Infrastructure Committee
From: Mrs L Marney - Committee Clerk
Date: 2nd March 2026
Subject: Correspondence rec'd: Middle Street/Chapel Street

The Committee Clerk has received correspondence and photos from a resident who lives on the corner of Chapel Street and Middle Street they have grave concerns regarding vehicles that are cutting this corner and the damage that has recently happened to their property.

"Please find below as you requested a couple of paragraphs and a selection of images which we have tried to capture and highlight the issue.

We hope that these photographs assist you in getting this issue resolved, we also have a "Ring-Doorbell" complete video footage of the van shown below, but unfortunately this file is too large to attach to this email, so we have taken a "Screenshot" which we hope shows just how severe and dangerous this situation is and is becoming. We also have further evidence of four-wheel drives and cars if needed and we would appreciate your patience while we collaborate these.

Consistently vehicles are cutting the corner so tightly that they mount the pavement and pass directly alongside our property within an inch of our home which you can see in the picture below (number 1) has been recently hit. It is only a matter of time before someone is seriously injured or our home is damaged. The danger is clear and entirely preventable. Given the frequency and severity of these incidents, it is evident that the current road layout fails to protect the public and our home particularly as it is also opposite a walkway, "St George's passage" which is used constantly by pedestrians coming from the High Street.

The absence of any physical barrier means drivers are effectively using the pavement on the corner of Dovetail Cottage as part of the carriageway. This presents a clear breach of the duty of care owed to residents, pedestrians, and our home.

We are therefore requesting direct intervention of Dover District Council, Kent County Council and the relevant highways authorities to take immediate action. A bollard really must be installed on the corner of Middle Street and Chapel Street as a matter of urgency to protect our property "Dovetail Cottage" which is in a conservation area. This will prevent all vehicles from mounting the pavement endangering lives and damaging our home."

Please see relevant photos attached.

Recommendation: This item be added to the DTC HIP application, to explore installation of a bollard at the corner of Middle Street and Chapel Street.

Decision required: Committee to consider the above recommendation.

No. 1

No. 2

No. 4

No. 3

ATTACHMENT 7

DEAL TOWN COUNCIL
MEMORANDUM

To: Cllr B Bano, Chairperson of the Transport & Infrastructure Committee, All Committee members
From: Mrs L Marney – Committee Clerk
Date: 10th March 2026
Subject: Committee Clerk Report

Stagecoach Newsletter

Deal Town Council have received the following communication from Stagecoach:

"We are pleased to share the inaugural edition of the Stagecoach South East newsletter, designed to keep you informed about the key initiatives and developments across our community
Inside, you will find highlights of our recent projects, achievements, and ongoing efforts to serve and connect with the communities we operate in. We hope you find this edition both informative and engaging, and we look forward to keeping you updated through future issues.

Thank you for your continued interest and support."

Please see attached Stagecoach South East Newsletter.

Decision required: Members to note this information

Stagecoach
South East, we've got you

South East Bus-iness Bulletin

February 2026 / Kent issue

Welcome

Welcome to the year's first edition of the Stagecoach South East newsletter. Our priority is keeping the people of Kent and East Sussex moving, so let's begin by looking at a few highlights on our recent journey.

Over the last seven months – between 4 May and 13 December 2025 – our buses covered 6,733,000 miles across Kent. That's the equivalent of travelling more than 270 times around the world at the equator.

Most importantly for us, this added up to almost 21 million passenger journeys. That's an incredible number of people to keep moving and we're pleased to be a part of so many daily connections.

This was all made possible thanks to our fleet of 261 buses, kept moving by an 836-strong team of drivers, engineers, maintenance, management and support staff at our depots in Ashford, Dover, Herne Bay and Ramsgate. You may not see each and every one of us, but we're all playing our part to keep our passengers moving.

Joel Mitchell
Managing Director
Stagecoach South East

In this issue

- Tackling illegal parking
- Funding update
- New improved app
- Raising money for Age UK
- Success at UK Bus Awards
- Improving Dover's bus network

Stagecoach South East network map

Tackling illegal parking to free up congestion

Illegal parking can have a significant impact on congestion and our ability to get our passengers to their destination on time.

In December we joined an innovative initiative to tackle illegal parking that causes difficulties for our buses, commercial vehicles and emergency services accessing certain roads.

A new Civil Enforcement Officer role has been created in partnership with Thanet District Council and Kent County Council, focused on 26 parking blackspots that regularly delay buses and affect passenger journeys. These are found on the Thanet Loop Improvement Project route.

The role is managed collaboratively between us and Thanet and in the first two weeks 66 Penalty Charge Notices were issued and 88 vehicles moved out of the way of bus routes.

The partnership is a great example of how, when we work together, we can make a real difference for local communities. Illegal parking causes significant delays for our customers and frustration for our drivers. By creating this role, we're already seeing positive results and improved bus reliability.

Santa swaps his sleigh for a Stagecoach bus

It feels a long time ago now, but December means Christmas, and a couple of months ago – as we do every year – we launched the annual Santa Bus in Thanet and Ashford.

The big man himself made an appearance on occasion, often supported by a festive else spreading good cheer and raising money and awareness for impactful local charities including Age UK.

In total, Stagecoach South East raised more than £3,000, so here's a big THANK YOU to everyone who donated to such an important cause.

H-Appy days on board with Stagecoach

Improving the experience of travelling with Stagecoach South East is the key to our efforts to strengthen customer loyalty and increase passenger numbers.

We recently carried out a big update on our app with a 'Track This Bus' option.

For passengers there's no more chasing a bus around on the map, instead you can choose to track a particular bus as it moves along the route on its way to your stop. Simply use the toggle button on the live map panel in the app and your chosen bus will stay in the centre of the map until you turn it off.

We've also introduced a live bus locations status. This new feature on the live map screen gives you a quick, at a glance view of how up to date the live location is for your chosen bus. This means you can compare it to Track This Bus information and feel more informed and confident about your journey.

We've also updated the journey planner on the app, making it a lot more customer-focused to help you plan your travels.

Looking ahead, we have another update planned for early this year to enable you to get personalised disruption notifications. This should empower you to make the best decisions about where and when you travel.

Child singles are now available to buy on the app

Leading by example

There are many ways to lead, and here at Stagecoach South East we as a company are working on leading by example to support the community.

A team of colleagues from across our catchment area recently got together to help Age UK, building new tables for their centres in Ashford, Hythe and Lyminge.

The team included our Managing Director Joel Mitchell and Commercial Director Katherine Jones, as they worked together to help create comfortable, reliable seating spaces for the older people who visit the centres.

The tables will be used for a range of activities, from arts and crafts to social catch-ups, helping to make the centres welcoming places where people can relax, connect, and feel part of a community.

Joel said: "I think of this as 'servant leadership', where local business leadership teams get together to support their communities, serving them in practical ways. It won't be for everyone but we'll certainly be doing more of it, alongside doing all we can to make sure our own organisation keeps trying to make things better for the community by keeping travellers connected."

Our team of volunteers said it was a pleasure speaking with the elderly people who use the centres and seeing how much the spaces mean to them. It was also a reminder of the importance of community initiatives and how partnerships with organisations such as Age UK can make a meaningful difference.

Local delivery gets national recognition

Stagecoach South East's Dover depot has achieved national recognition, winning the Silver award for Depot of the Year at the UK Bus Awards.

The award acknowledges the team's resilience and performance following the merger of the former Dover and Folkestone depots in 2023.

The merger brought together two teams of drivers and engineers, who then needed to work as one team and learn new routes. The goal was to create a single effective depot.

The award ceremony included a poignant moment for the Dover team, as the committee delivered a heartfelt tribute to long-serving colleague Richard Hughes.

We couldn't be prouder of our Dover team. They have consistently demonstrated incredible work and what it truly means to come together as a team.

The award recognises the depot's commitment to delivering safe, reliable, and high-quality bus services across Kent communities.

Kent Bus Service Improvement Plan (BSIP) – Funding update

As part of the Government's £3bn commitment, Kent is to receive £14m per year for revenue funding, and a further £12m per year for capital funding between 2026 and 2030.

This is part of the next phase of Bus Grant funding to Kent County Council (KCC), with revenue funding earmarked for supporting actual bus services and ticket offers and capital funding for bus priority measures and items like shelters and real time information.

Although KCC's revenue allocation has increased by 25%, 70% of the funding is already committed to keep certain routes where they are and also keep the price of the Kent Travel Scheme lower.

Kent County Council
kent.gov.uk

Improving Dover's connectivity to London and the continent

High speed connections to the capital and a direct link to the port are the latest improvements to Dover's bus network.

Upgraded at the end of last year, the Fastrack timetable has been extended to better connect high speed rail travellers with the Dover bus network. This means our Monday to Saturday services are now timed to meet the first and last High Speed Rail services between Dover Priory and London.

Our Fastrack timetable is now also extended to seven days a week. The improvements were made possible thanks to partnership working with Kent County Council and mark a significant milestone in enabling this service to reach its full intended timetable.

We've also launched a new trial bus service, Route 66, which will provide a direct route to the Port of Dover, including Whitfield. This service comes after a 12-month trial of a shuttle bus to the port, Route 67, which has now been cancelled. Bus services to Buckland Hospital and the River area continue to be served by Route 64.

We're encouraging people to make the most of these changes to ensure they become permanent features of the Dover transport map.

Route 66 bus times

from 8 December 2025

66 inbound

Whitfield Forge Lane	Dep 06:50	07:50	08:50	09:50	10:50	11:50	13:50	14:50	15:50	16:50	17:50
Whitfield The Archer	Dep					11:54					17:54
Whitfield Tesco	Arr 06:57	07:57	08:57	09:57	10:57	11:57	13:57	14:57	15:57	16:57	17:09
Dover Eastern Docks	Dep 07:09	08:09	09:09	10:09	11:09		14:09	15:09	16:09	17:09	17:15
Priory Street Stop F	Dep 07:15	08:15	09:15	10:15	11:15		14:15	15:15	16:15	17:15	17:17
Dover Priory Railway Station	Arr 07:17	08:17	09:17	10:17	11:17		14:17	15:17	16:17	17:17	

66 outbound

Dover Priory Railway Station	Dep 07:20	08:20	09:20	10:20	11:20		14:20	15:20	16:20	17:20
Pencester Road V	Arr 07:23	08:23	09:23	10:23	11:23		14:23	15:23	16:23	17:23
Pencester Road V	Dep 07:25	08:25	09:25	10:25	11:25		14:25	15:25	16:25	17:25
Dover Eastern Docks	Dep 07:29	08:29	09:29	10:29	11:29		14:29	15:29	16:29	17:29
Whitfield Tesco	Dep 07:41	08:41	09:41	10:41	11:41	13:41	14:41	15:41	16:41	17:41
Whitfield Forge Lane	Arr 07:49	08:49	09:49	10:49	11:49	13:49	14:49	15:49	16:49	17:49

Stagecoach
we've got you

Coming soon to Dover

We will shortly be taking delivery of five brand-new electric buses which will run on the Fastrack route between Dover Priory station and Whitfield, marking the final stage in delivering south Kent's first fully electric, zero-emission rapid bus transit system.

Our 100% electric, zero emission buses mean everyone can breathe in cleaner, better quality air. Just one electric bus saves 66 tonnes of CO_2 per year compared to a standard bus. That's the same as driving a petrol car 169,000 miles!

Reliability

Over the last three months, between 97.33% and 98.92% of our scheduled bus services ran as planned.

This is very much a team effort with drivers, supervisors, cleaners and engineers working together every day to deliver the best possible service for our customers.

There are numerous issues that can affect whether a bus can run, many of which we can't control such as poor weather, roadworks and road closures. However, we're always striving to improve our reliability and provide the best possible service for our customers across Kent.

Depot	21 Sept - 18 Oct 2025	19 Oct - 15 Nov 2025	16 Nov - 13 Dec 2025	Average over three months
Ashford	97.9%	97.25%	96.85%	**97.33%**
Canterbury	99.39%	98.49%	98.88%	**98.92%**
Dover	98.42%	99.15%	99.10%	**98.89%**
Thanet	98.08%	98.53%	98.05%	**98.22%**